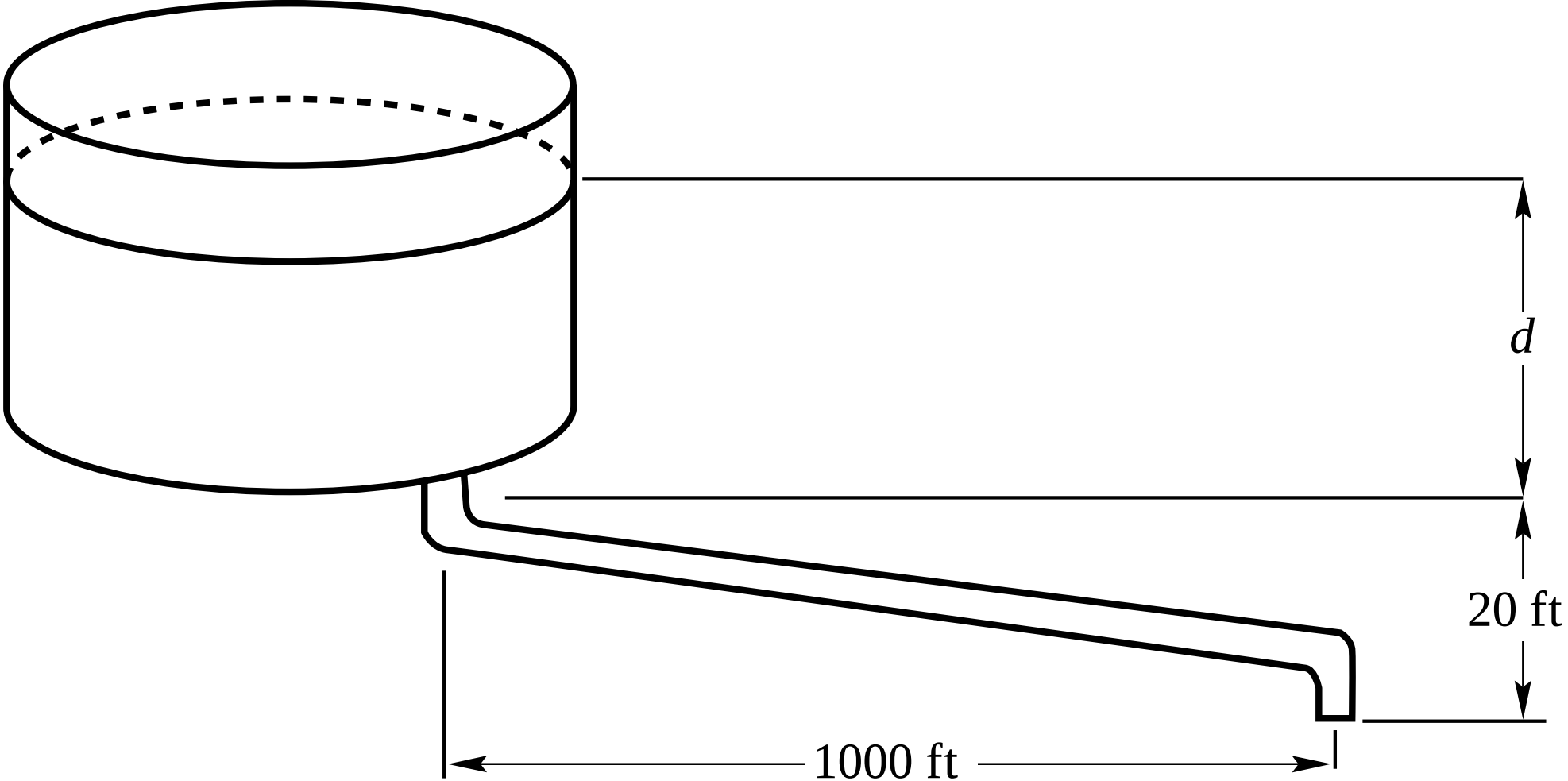
d
20 ft
1000 ft